William Hird & Co, Inc.
@ 255 40th Street Brooklyn, NY 11232
Call Now (718) 499-4881

SUBMITTAL: PANORAMA STAINLESS STEEL FIRE EXTINGUISHER CABINETS

The Panorama Cabinet Features a Frameless Acrylic Door of Clear or Opaque Textured Acrylic with Many Lettering Options.

Door & Trim Construction: Flush acrylic cabinet doors are attached by a continuous hinge and equipped with zinc-plated handle and roller catch. 1-3/4" trim on cabinet has #4 stainless steel finish.

Trim Style & Depth: *Recessed* 3/8" flat trim, *Semi Recessed* - 1-1/4", 1-1/2" Square Edge or 2-1/2", 3", 4", 4-1/2" Rolled Edge (4" has recessed ADAC pull). *Surface-mount* models have a square edge or optional rolled edge upon request.

Tub: The tub is constructed of cold rolled steel with white powder-coat finish standard. Surface mount models have #4 stainless steel tub.

Fire-Rated Option Available: Yes - See separate Submittal Form.

1036C70

1038Q43

STEP 1: **SELECT MODEL NUMBER , MATERIAL AND QUANTITY ON CHART** (refer to chart on pg 2)
A. Determine Trim Style according to wall depth. **B.** Determine Tub I.D. according to size most suited for extinguisher and wall opening.

STEP 2: SELECT DOOR ACRYLIC WITH HANDLE (Check one box below)

- ☐ **C70** Clear 3/16" Unlettered Smooth Acrylic
- ☐ **C71** Clear 3/16" Unlettered Smooth Acrylic & Saf-T-Lok™
- ☐ **P** Identity: 3/16" Textured Obscure Acrylic with Lettering
- ☐ **Q** Identity: 3/16" Textured Obscure Acrylic with Lettering & Saf-T-Lok™

STEP 3 - P&Q DOORS SELECT LETTERING STYLE View lettering styles on page 2 or: VIEW LETTERING STYLES ONLINE

☐	40 Vert, Black Bkgd, White Lettering	☐	45 Horiz, Black Bkgd, White Lettering	☐	50 Ascend, Black Bkgd, White Lettering
☐	41 Vert, Red Bkgd, White Lettering	☐	46 Horiz, Red Bkgd, White Lettering	☐	51 Ascend, Red Bkgd, White Lettering
☐	42 Vert, White Bkgd, Black Lettering	☐	47 Horiz, White Bkgd, Black Lettering	☐	52 Ascend, White Bkgd, Black Lettering
☐	43 Vert, White Bkgd, Red Lettering	☐	48 Horiz, White Bkgd, Red Lettering	☐	53 Ascend, White Bkgd, Red Lettering

BIM Objects for REVIT® Platform

STEP 4: OPTIONAL FEATURES AT ADDED COST (SELECT ANY)

- ☐ Optional Tub Color: ____ Black _____Red
- ☐ Futura "Fire" Handle ____ Mill Aluminum (**PUF**) ____ Red ____ White
- ☐ ADAC Flush Pull Handle
- ☐ Polished Chrome Lever Handle (**P6**)
- ☐ Other Stainless Finish:____ #6 ____ #7 ____ #8
- ☐ Stainless Tub ____ #4 Finish
- ☐ **(CA)** Commander Alarm
- ☐ **(BA)** Brigadier Alarm
- ☐ **(SA)** Strobe Alarm (surf mount)
- ☐ Rolled Edge Surface Mount

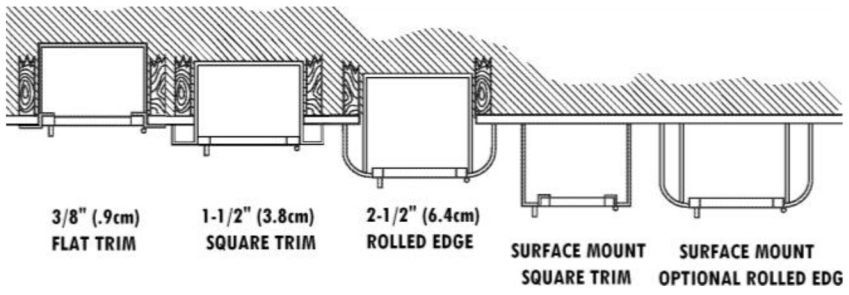

See Other Submittals: Decals & Die Lettering, Wall Signs, Alarms, Pulls & Levers

TRIM & DOOR SERIES #			Tub I.D.			Frame O.D.		Wall Opening			View Extinguishers
QTY	Model	Trim Style (in)	A	B	C	E	F	W	H	D	
	8135	Flat trim	9	18	5 1/2	12 3/8	21 3/8	10	19	5 3/4	Cosmic & Galaxy 2 1/2-6, Mercury 2 1/2- 5
	8136	1 1/2 Square	9	18	5 1/2	12 3/8	21 3/8	10	19	4	
	8137	2 1/2 Rolled	9	18	5 1/2	12 3/8	21 3/8	10	19	3 1/8	
	8133	Surf. Mtd.	12 3/16	21 3/16	6	12 3/8	21 3/8	--	--	--	
	1835	Flat trim	10 1/2	24	5 1/2	13 7/8	27 3/8	11 1/2	25	5 3/4	Cosmic & Galaxy 2 1/2-6 Mercury 2 1/2-5
	1836	1 1/2 Square	10 1/2	24	5 1/2	13 7/8	27 3/8	11 1/2	25	4	
	1837	3 Rolled	10 1/2	24	5 1/2	13 7/8	27 3/8	11 1/2	25	2 5/8	
	1832	4 Rolled/ADA Pull	10 1/2	24	5 1/2	13 7/8	27 3/8	11 1/2	25	1 5/8	
	1838	4 1/2 Rolled	10 1/2	24	5 1/2	13 7/8	27 3/8	11 1/2	25	1 1/8	
	1035	Flat trim	10 1/2	24	6	13 7/8	27 3/8	11 1/2	25	6 1/4	Cosmic & Galaxy 2 1/2-10 Mercury 2 1/2-5, Sentinel 5
	1036	1 1/2 Square	10 1/2	24	6	13 7/8	27 3/8	11 1/2	25	4 1/2	
	1037	3 Rolled	10 1/2	24	6	13 7/8	27 3/8	11 1/2	25	3 1/8	
	1032	4 Rolled/ADA Pull	10 1/2	24	6	13 7/8	27 3/8	11 1/2	25	2 1/8	
	1038	4 1/2 Rolled	10 1/2	24	6	13 7/8	27 3/8	11 1/2	25	1 5/8	
	1033	Surf. Mtd.	13 11/16	27 3/16	6 1/2	13 7/8	27 3/8	--	--	--	
	2035	Flat trim	12	27	7 3/4	15 3/8	30 3/8	13	28	8	Any Cosmic**, Galaxy**, Mercury, Saturn or Grenadier P, Sentinel 5 & 10
	2036	1 1/4 Square	12	27	7 3/4	15 3/8	30 3/8	13	28	6 3/4	
	2037	2 1/2 Rolled	12	27	7 3/4	15 3/8	30 3/8	13	28	5 1/2	
	2032	4 Rolled/ADA Pull	12	27	7 3/4	15 3/8	30 3/8	13	28	4	
	2038	4 1/2 Rolled	12	27	7 3/4	15 3/8	30 3/8	13	28	3 1/2	
	2033	Surf. Mtd.	15 3/16	30 3/16	8 1/4	15 3/8	30 3/8	--	--	--	
	3035	Flat trim	16	32	7 3/4	19 3/8	35 3/8	17	33	8	Any Cosmic**, Galaxy**, Mercury, Saturn or Grenadier P, Sentinel 5-15, 272
	3036	1 1/4 Square	16	32	7 3/4	19 3/8	35 3/8	17	33	6 3/4	
	3037	2 1/2 Rolled	16	32	7 3/4	19 3/8	35 3/8	17	33	5 1/2	
	3032	4 Rolled/ADA Pull	16	32	7 3/4	19 3/8	35 3/8	17	33	4	
	3038	4 1/2 Rolled	16	32	7 3/4	19 3/8	35 3/8	17	33	3 1/2	
	3033	Surf. Mtd.	19 3/16	35 3/16	8 1/4	19 3/8	35 3/8	--	--	--	
	4035	Flat trim	20	27	7 3/4	23 3/8	30 3/8	21	28	8	Two each of: any Cosmic**, Galaxy**, Mercury, Saturn or Grenadier P, Sentinel 5
	4036	1 1/4 Square	20	27	7 3/4	23 3/8	30 3/8	21	28	6 3/4	
	4037	2 1/2 Rolled	20	27	7 3/4	23 3/8	30 3/8	21	28	5 1/2	
	4032	4 Rolled/ADA Pull	20	27	7 3/4	23 3/8	30 3/8	21	28	4	
	4038	4 1/2 Rolled	20	27	7 3/4	23 3/8	30 3/8	21	28	3 1/2	
	4033	Surf. Mtd.	23 3/16	30 3/16	8 1/4	23 3/8	30 3/8	--	--	--	

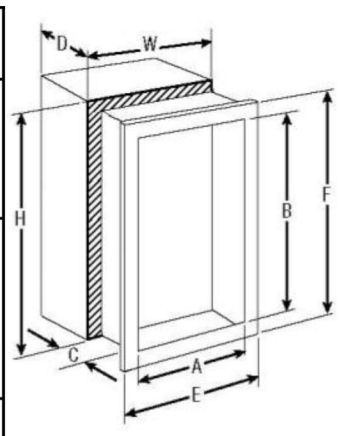

1832P48—ADA Pull

PANORAMA "P" & "Q" DOOR GLAZING STYLES

Models shown in **Large Bold** above are available in several door styles for Quick Shipment. See current Stock List.
** Cosmic 20 & Galaxy 20 Extinguisher must be mounted on the back of the cabinet tub ADA Cabinets in Blue

Copyright © 2013 William Hird & Co., Inc.