Security Panels

Larsen's Security Panels are manufactured for high security **(L-DPH)**, medium security **(L-DPM)**, and fire-rated **(L-DPFB)** security applications. For concealment, Larsen's offers the L-DPM and L-DPFB with drywall corner bead or plaster bead frames (**please contact Larsen's for sizing and availability**).

L-DPH

High security access panel for all applications

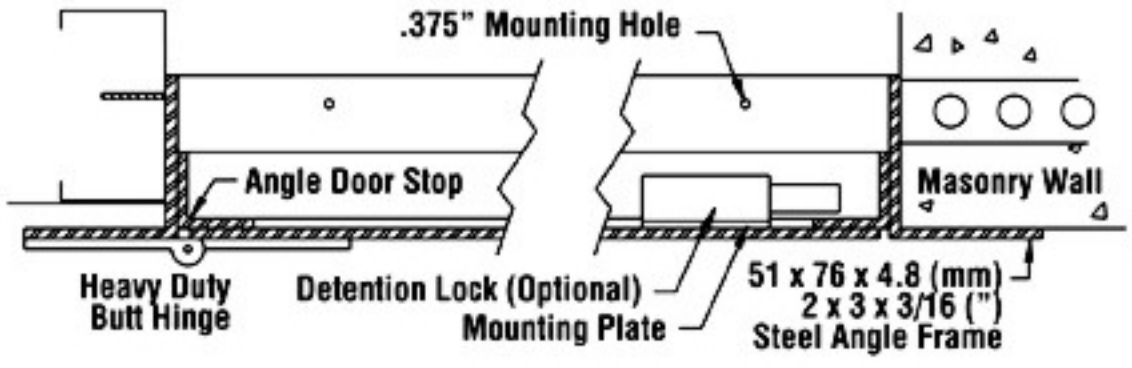

L-DPM

Medium security access panel for all applications

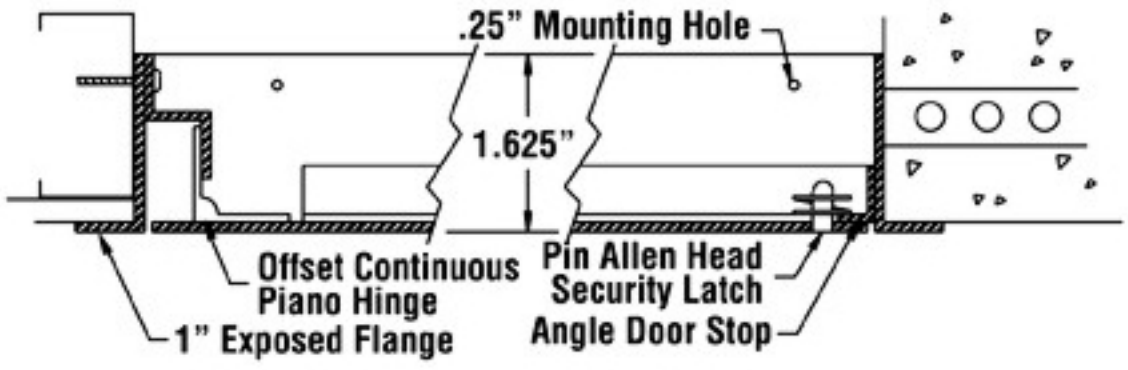

L-DPFB

Medium security access panel for all applications

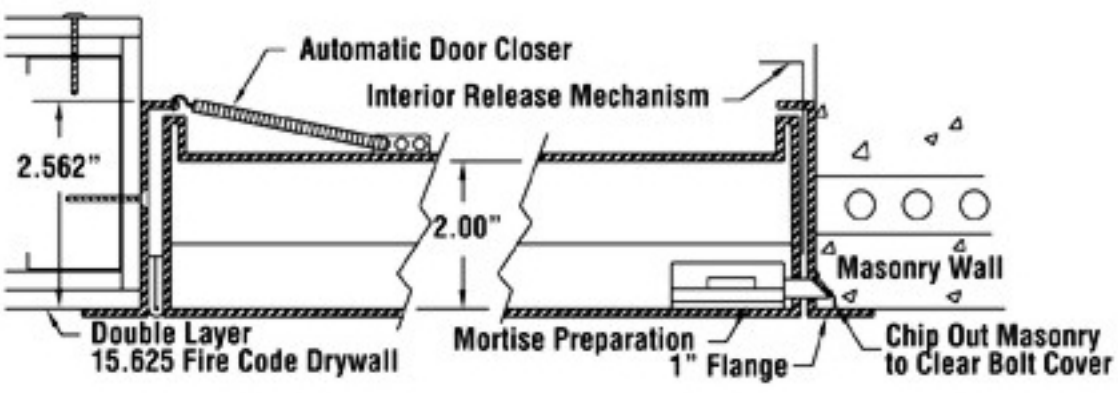

L-DPFB is available for wall applications only

L-DPH	L-DPM	L-DPFB	Part	Description
X			Door	10 ga. cold rolled steel
	X		Door	12 ga. cold rolled steel
		X	Door	14 ga. cold rolled steel
X			Frame	2" x 2" 3/16" steel angle
	X		Frame	12 ga. cold rolled steel with 1" flange
		X	Frame	16 ga. cold rolled steel with 1" flange
X			Hinge	Surface-mounted, heavy duty butt hinges
	X		Hinge	Concealed continuous piano hinge
		X	Hinge	Flush continuous piano hinge
X			Latch	Security screws (other options available)
	X		Latch	Pinned allen head cam latch
		X	Latch	Mortise perparations for 1.125" mortise cylinder
X	X	X	Finish	Phosphate dipped and prime coated
		X	Finish	2" Fire-rated mineral fiber

Width x Height		Latches
mm	inches	
152 x 152	06 x 06*	1
203 x 203	08 x 08*	1
254 x 254	10 x 10*	1
305 x 305	12 x 12	1
305 x 457	12 x 18*	2
305 x 610	12 x 24*	2
356 x 356	14 x 14*	1
406 x 406	16 x 16	1
406 x 508	16 x 20*	1
457 x 457	18 x 18	2
457 x 610	18 x 24*	2
559 x 559	22 x 22*	4
559 x 762	22 x 30	5
610 x 610	24 x 24	4
610 x 762	24 x 30*	5
610 x 914	24 x 36	5
610 x 1016	24 x 40	4
610 x 1219	24 x 48	6
762 x 762	30 x 30*	5
813 x 813	32 x 32*	5
914 x 914	36 x 36	5

Rough Opening = Panel Size + .25"
(L-DPH = Panel Size + .75")

All access panels are hinged on the second dimension (height).

**Fire-Rated (L-DPFB) only*

Copyright © 2013 William Hird & Co., Inc.